Glo-Ray 2-Go™

Heated Shelves

GRS2G Series

Installation and Operating Manual

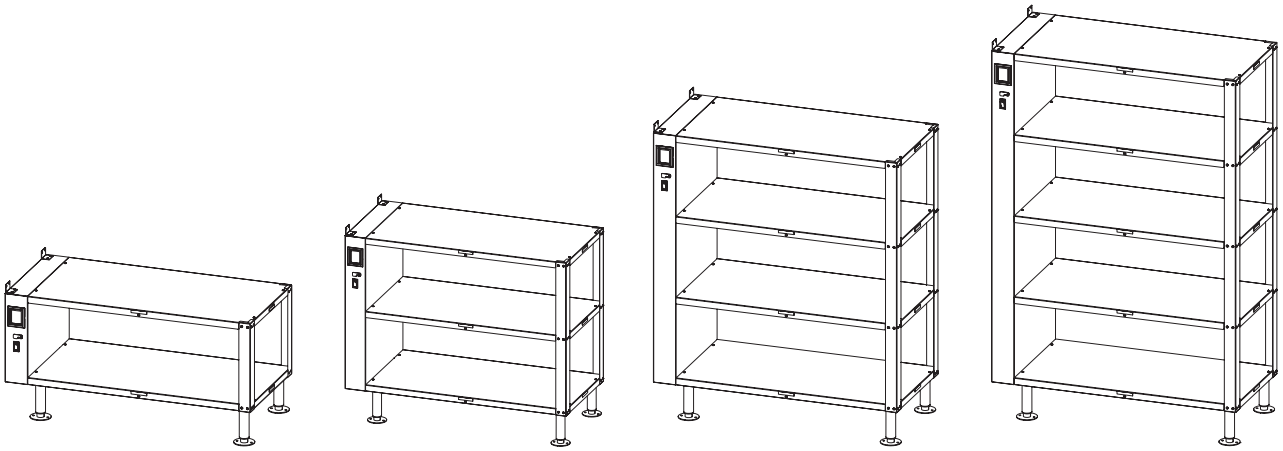

⚠ WARNING

Do not operate this equipment unless you have read and understood the contents of this manual! Failure to follow the instructions contained in this manual may result in serious injury or death. This manual contains important safety information concerning the maintenance, use, and operation of this product. If you're unable to understand the contents of this manual, please bring it to the attention of your supervisor. Keep this manual in a safe location for future reference.

⚠ ADVERTENCIA

No opere este equipo al menos que haya leído y comprendido el contenido de este manual! Cualquier falla en el seguimiento de las instrucciones contenidas en este manual puede resultar en un serio lesión o muerte. Este manual contiene importante información sobre seguridad concerniente al mantenimiento, uso y operación de este producto. Si usted no puede entender el contenido de este manual por favor pregunte a su supervisor. Almacenar este manual en una localización segura para la referencia futura.

⚠ AVERTISSEMENT

Ne pas utiliser cet équipement sans avoir lu et compris le contenu de ce manuel ! Le non-respect des instructions contenues dans ce manuel peut entraîner de graves blessures ou la mort. Ce manuel contient des informations importantes concernant l'entretien, l'utilisation et le fonctionnement de ce produit. Si vous ne comprenez pas le contenu de ce manuel, veuillez le signaler à votre supérieur. Conservez ce manuel dans un endroit sûr pour pouvoir vous y référer plus tard.

P/N 07.04.994.00

© 2020 Hatco Corporation

CONTENTS

Important Owner Information **2**
Introduction **2**
Important Safety Information **3**
Model Description **4**
Model Designation **4**
Specifications **5**
Plug Configurations 5
Electrical Rating Charts 5
Dimensions 5
Installation **6**
General 6
Operation **7**
General 7
Changing the Temperature Settings 8
Using Timers 8
Changing the Timer Settings 8
Updating the Firmware 9
Maintenance **9**
General 9
Daily Cleaning 9
Troubleshooting Guide **10**
Options and Accessories **10**
Limited Warranty **11**
Authorized Parts Distributors ..... **Back Page**

IMPORTANT OWNER INFORMATION

Record the model number, serial number, voltage, and purchase date of the unit in the spaces below (located on the back of the unit). Please have this information available when calling Hatco for service assistance.

Model No. _____

Serial No._____

Voltage_____

Date of Purchase_____

Register your unit!

Completing online warranty registration will prevent delay in obtaining warranty coverage. Access the Hatco website at **www.hatcocorp.com**, select the *Support* pull-down menu, and click on “Warranty”.

Business Hours: 7:00 AM to 5:00 PM Monday–Friday, Central Time (CT)
(Summer Hours: June to September—
7:00 AM to 5:00 PM Monday–Thursday
7:00 AM to 4:00 PM Friday)

Telephone: 800-558-0607; 414-671-6350

E-mail: support@hatcocorp.com

24/7 — 24 Hour 7 Day Parts and Service Assistance available in the United States and Canada by calling 800-558-0607.

Additional information can be found by visiting our web site at **www.hatcocorp.com**.

INTRODUCTION

Hatco Glo-Ray 2-Go™ Heated Shelves are designed specifically to hold a large quantity of packaged, hot food items for up to 30 minutes. The large, individually-controlled shelves can fit a variety of carry-out/delivery bags and boxes.

Glo-Ray 2-Go Heated Shelves are products of extensive research and field testing. The materials used were selected for maximum durability, attractive appearance, and optimum performance. Every unit is inspected and tested thoroughly prior to shipment.

This manual provides the installation, safety, and operating instructions for Glo-Ray 2-Go Heated Shelves. Hatco recommends all installation, operating, and safety instructions appearing in this manual be read prior to installation or operation of the unit.

Safety information that appears in this manual is identified by the following signal word panels:

⚠ WARNING

WARNING indicates a hazardous situation which, if not avoided, could result in death or serious injury.

⚠ CAUTION

CAUTION indicates a hazardous situation which, if not avoided, could result in minor or moderate injury.

NOTICE

NOTICE is used to address practices not related to personal injury.

Read the following important safety information before using this equipment to avoid serious injury or death and to avoid damage to equipment or property.

WARNING

ELECTRIC SHOCK HAZARD:

- Plug unit into a properly grounded electrical receptacle of the correct voltage, size, and plug configuration. If plug and receptacle do not match, contact a qualified electrician to determine and install proper voltage and size electrical receptacle.
- Turn OFF power switch, unplug power cord, and allow unit to cool before performing any cleaning, adjustments, or maintenance.
- DO NOT submerge or saturate with water. Unit is not waterproof. Do not operate if unit has been submerged or saturated with water.
- Unit is not weatherproof. Locate unit indoors where ambient air temperature is a minimum of 70°F (21°C).
- Do not clean unit when unit is energized or hot.
- Do not steam clean or use excessive water on the unit.
- This unit is not "jet-proof" construction. Do not use jet-clean spray to clean this unit.
- Discontinue use if power cord is frayed or worn.
- Do not attempt to repair or replace a damaged power cord. Cord must be replaced by an Authorized Hatco Service Agent or a person with similar qualifications.
- Do not allow liquids to spill onto unit.
- This unit must be serviced by qualified personnel only. Service by unqualified personnel may lead to electric shock or burn.
- Use only Genuine Hatco Replacement Parts when service is required. Failure to use Genuine Hatco Replacement Parts will void all warranties and may subject operators of the equipment to hazardous electrical voltage, resulting in electrical shock or burn. Genuine Hatco Replacement Parts are specified to operate safely in the environments in which they are used. Some aftermarket or generic replacement parts do not have the characteristics that will allow them to operate safely in Hatco equipment.

WARNING

FIRE HAZARD: Do not use harsh chemicals such as bleach (or cleaners containing bleach), oven cleaners, or flammable cleaning solutions to clean this unit.

Units not installed properly could tip over, resulting in personal injury and/or damage to unit.

Make sure food product has been heated to the proper food-safe temperature before placing in unit. Failure to heat food product properly may result in serious health risks. This unit is for holding preheated food product only.

Hatco Corporation is not responsible for actual food product serving temperature. It is the responsibility of the user to ensure that food product is held and served at a safe temperature.

Make sure all operators have been instructed on the safe and proper use of the unit.

This unit is not intended for use by children or persons with reduced physical, sensory, or mental capabilities. Ensure proper supervision of children and keep them away from the unit.

This unit has no "user-serviceable" parts. If service is required on this unit, contact an Authorized Hatco Service Agent or contact the Hatco Service Department at 800-558-0607 or 414-671-6350.

CAUTION

BURN HAZARD: Some exterior surfaces on unit will get hot. Use caution when touching these areas.

Locate unit in an area that is convenient for use. The location should be level and strong enough to support the weight of the unit and contents.

NOTICE

Do not lay unit on front or back side. Damage to unit could occur.

Use non-abrasive cleaners and cloths only. Abrasive cleaners and cloths could scratch finish of unit, marring its appearance and making it susceptible to soil accumulation.

MODEL DESCRIPTION

All Models

All Hatco Glo-Ray 2-Go™ Heated Shelves are designed to hold packaged delivery and carry-out orders. Each unit features a touchscreen controller capable of controlling each shelf individually, a Power I/O (on/off) switch, and wall/floor securing options. The heating elements are warranted for two years.

GRS2G models are available in two, three, four, and five-shelf versions and include a recessed 6′ (1829 mm) power cord with plug. They are equipped with wall brackets and 6″ (152 mm) flanged legs that can be bolted to the floor. All units are available in several *Designer* colors.

NOTE: Refer to the OPTIONS AND ACCESSORIES *section of this manual for all of the available options and accessories.*

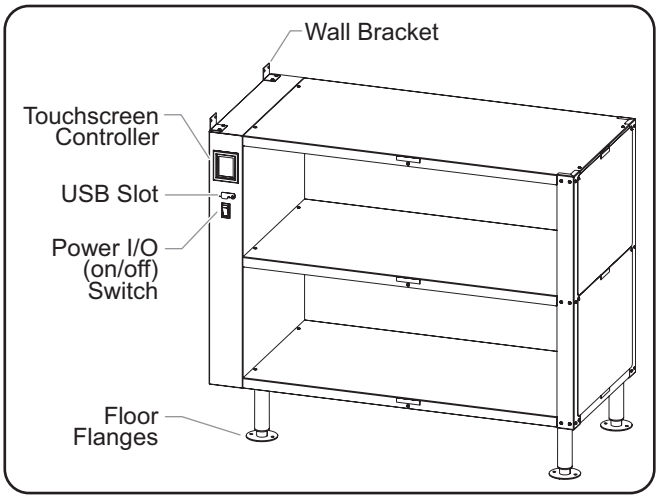

Model GRS2G-3920-3

MODEL DESIGNATION

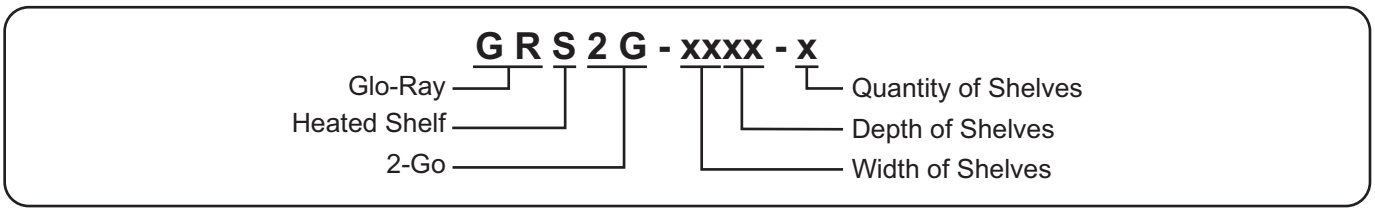

Plug Configurations

Units are supplied from the factory with an electrical cord and plug installed. Plugs are supplied according to the application.

⚠ WARNING

ELECTRIC SHOCK HAZARD: Plug unit into a properly grounded electrical receptacle of the correct voltage, size, and plug configuration. If plug and receptacle do not match, contact a qualified electrician to determine and install proper voltage and size electrical receptacle.

NOTE: The specification label is located on the back of the units. See label for serial number and verification of unit electrical information.

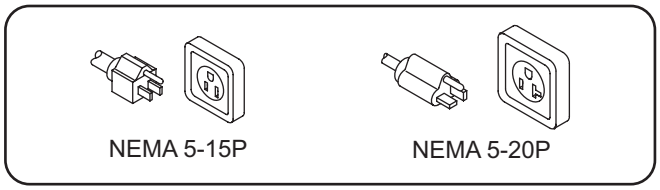

Plug Configurations

NOTE: Receptacle not supplied by Hatco.

Electrical Rating Chart

Model	Voltage	Watts	Amps	Plug Configuration	Shipping Weight
GRS2G-3920-2	120	704	5.6	NEMA 5-15P *	150 lbs. (69 kg)
GRS2G-3920-3	120	1055	8.8	NEMA 5-15P *	175 lbs. (80 kg)
GRS2G-3920-4	120	1406	11.7	NEMA 5-15P *	200 lbs. (91 kg)
GRS2G-3920-5	120	1757	14.6	NEMA 5-15P *	225 lbs. (103 kg)

* NEMA 5-20P for Canada

NOTE: Shipping weight includes packaging.

Dimensions

Model	Width (A)	Depth (B)	Height (C)	Footprint Width (D)	Footprint Depth (E)
GRS2G-3920-2	43″ (1093 mm)	20″ (508 mm)	21-1/2″ (546 mm)	39-1/8″ (994 mm)	20-1/8″ (511 mm)
GRS2G-3920-3	43″ (1093 mm)	20″ (508 mm)	35-3/4″ (908 mm)	39-1/8″ (994 mm)	20-1/8″ (511 mm)
GRS2G-3920-4	43″ (1093 mm)	20″ (508 mm)	50″ (1270 mm)	39-1/8″ (994 mm)	20-1/8″ (511 mm)
GRS2G-3920-5	43″ (1093 mm)	20″ (508 mm)	64-1/4″ (1631 mm)	39-1/8″ (994 mm)	20-1/8″ (511 mm)

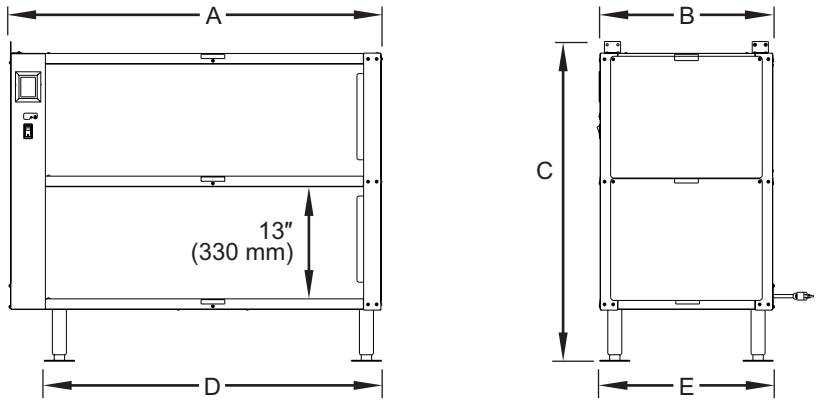

Front View

Side View

INSTALLATION

General

Glo-Ray 2-Go™ Heated Shelves are shipped with most components pre-assembled. Care should be taken when unpacking the shipping carton to avoid damage to the unit and components enclosed.

⚠ WARNING

ELECTRIC SHOCK HAZARD: Unit is not weatherproof. Locate unit indoors where ambient air temperature is a minimum of 70°F (21°C).

FIRE HAZARD: Locate unit a minimum of 1″ (25 mm) from combustible walls and materials. If safe distances are not maintained, combustion or discoloration could occur.

1. Remove the unit and any loose components from the carton.

NOTE: To prevent delay in obtaining warranty coverage, complete online warranty registration. See the IMPORTANT OWNER INFORMATION *section for details.*

2. Remove tape and protective packaging from all surfaces of unit.

NOTICE

Do not lay unit on the front or back side. Damage to the unit could occur.

3. Carefully lay the unit on its side and install the included four legs. **CAUTION! This step requires at least two people.**
   - Thread a leg into the hole at each corner on the bottom of the unit. Hand-tighten the legs until snug—do not over-tighten.

NOTE: Legs are not required on GRS2G-3920-2 and GRS2G-3920-3 models if installing on a countertop and sealing with silicone.

4. Place the unit in the desired location.
   - Locate the unit in an area where the ambient air temperature is constant and a minimum of 70°F (21°C). Avoid areas that may be subject to active air movements or currents (i.e., near exhaust fans/hoods, air conditioning ducts, and exterior doors).
   - For floor units, make sure the floor is level and the unit is in an area convenient for use.
   - For countertop units, make sure the countertop is level and strong enough to support the weight of the unit and its contents.
5. Secure the unit using the wall brackets or floor flanges, if necessary.
   - GRS2G-3920-2 and GRS2G-3920-3 models are counter mountable and can be secured to the countertop or a wall to prevent tipping.
   - GRS2G-3920-4 and GRS2G-3920-5 models are recommended to be secured to the floor or a wall to prevent tipping.

⚠ WARNING

Units not installed properly could tip over, resulting in personal injury and/or damage to unit.

- **For securing the unit to a wall using the wall brackets, refer to the "Wall Bracket Installation" procedure in this section.**
- For securing the unit to the floor/countertop using the floor flanges, refer to the "Floor Flange Installation" procedure in this section.

Wall Bracket Installation

Use the following procedure to secure a unit to a wall using the wall brackets.

1. Verify that the desired installation location will work for securing the unit.
2. Locate the studs in the wall to determine the appropriate fasteners for proper installation (not supplied).
3. Secure the unit to the wall using the appropriate fasteners through the wall brackets.

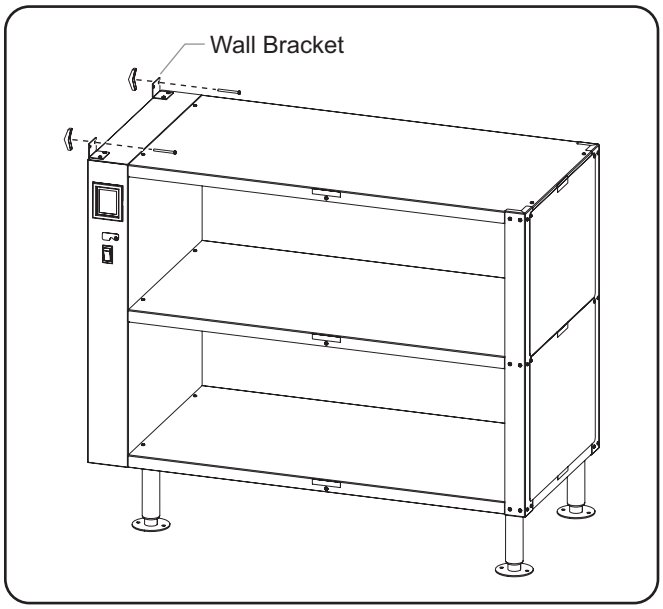

Wall Bracket Installation

Floor Flange Installation

Use the following procedure to secure a unit to the floor using the floor flanges. GRS2G-3920-2 and GRS2G-3920-3 models can be secured to a countertop using this procedure.

1. Verify that the desired installation location will work for securing the unit.
2. Determine the appropriate fasteners (not supplied) for proper installation based on the flooring/countertop material.
3. Secure the unit to the floor/countertop using the appropriate fasteners through the floor flanges.
   - The floor flanges are adjustable for leveling the unit before securing to the floor/countertop.

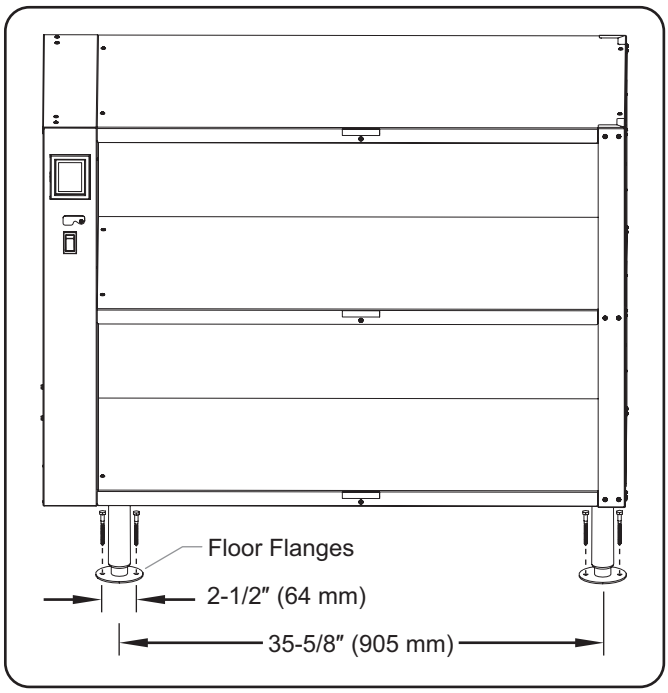

Floor Flange Installation

OPERATION

General

Use the following procedure to operate Glo-Ray 2-Go Heated Shelves. Each shelf can be controlled and monitored individually using the touchscreen controller.

⚠ WARNING

Read all safety messages in the IMPORTANT SAFETY INFORMATION section before operating this equipment.

Startup

1. Plug the unit into a properly grounded electrical receptacle of the correct voltage, size, and plug configuration. See the SPECIFICATIONS section for details.
2. Move the Power I/O (on/off) switch to the **I** (on) position.
   - The heating elements will energize.
   - The touchscreen controller will energize and show the Home Screen. The Home Screen shows the current temperatures that correspond with the position of each shelf on the unit.

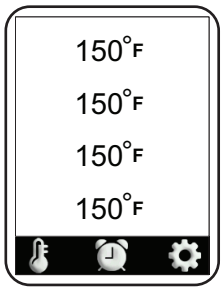

⚠ CAUTION

BURN HAZARD: Some exterior surfaces on unit will get hot. Use caution when touching these areas.

3. Allow the unit 15–20 minutes to reach operating temperature before loading the shelves with pre-heated food product.

NOTE: The controller is pre-set at the factory with each shelf temperature at 150°F (66°C).

4. Refer to the “Changing the Temperature Settings” procedure in this section to change the shelf temperature, if necessary.

Shutdown

1. Move the Power I/O (on/off) switch to the **O** (off) position and allow the unit to cool.
2. Perform the “Daily Cleaning” procedure in the MAINTENANCE section of this manual.

Changing the Temperature Settings

Use the following procedure to set or change the temperature setting of a shelf. The touchscreen controller is pre-set at the factory to a temperature of 150°F (66°C).

1. Move the Power I/O (on/off) switch to the **I** (on) position.
   - The unit will turn on and the touchscreen controller will energize and show the Home Screen.
2. Touch the desired temperature setting to adjust.
3. Touch the red ⬆ or ⬇ key on the display to set the desired air temperature.
4. Touch the key to save the settings and return to the Home Screen.

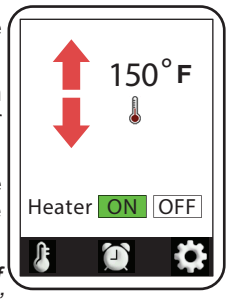

NOTE: The heating element on the shelf can be shut off by selecting "OFF" on this screen.

Changing Between Celsius and Fahrenheit

Use the following procedure to change the temperature unit of measure between Celsius and Fahrenheit.

1. Move the Power I/O (on/off) switch to the **I** (on) position.
   - The unit will turn on and the touchscreen controller will energize and show the Home Screen.
2. Touch the key.
   - Enter the password [2 4 8] using the number keys that appear.
   - The Service screen will appear on the display.
3. Touch the CONTROL key on the Service screen to access the Control Settings screen.
4. Choose the desired unit of measure on the "Units" line:
   - Touch the "F" box to select Fahrenheit.
   - Touch the "C" box to select Celsius.

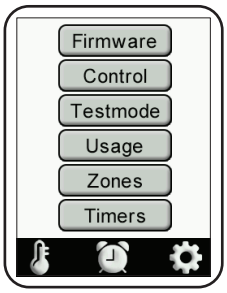

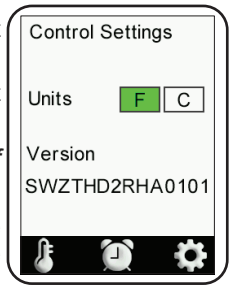

NOTE: The box for the active unit of measure is highlighted in green.

5. Touch the key to save the settings and return to the Home Screen.

Using the Timers

Use the following procedure to use timers for the product on each shelf.

1. Touch the key to display the Timers Screen.

NOTE: The position of the timers on the screen corresponds with the position of the shelf on the unit.

2. Start the desired timer(s).
   - Touch a timer to start a countdown from the pre-set time setting.
   - Touch and hold a timer for three seconds to turn off and reset the timer
   - When a timer has one minute remaining, it will be highlighted in flashing red. When a timer reaches zero, the unit will beep three times and the red highlight on the timer will remain solid until it is reset by the operator.
3. Press and hold the red highlighted timer for three seconds to reset the time.

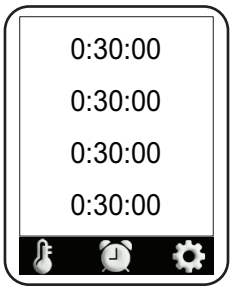

Changing the Timer Settings

Use the following procedure to change the time setting on each of the timers.

1. Move the Power I/O (on/off) switch to the **I** (on) position.
   - The unit will turn on and the touchscreen controller will energize and show the Home Screen.
2. Touch the key.
   - Enter the password [2 4 8] using the number keys that appear.
   - The Service screen will appear on the display.
3. Touch the TIMERS key on the Service screen to access the Timers Screen.
4. Touch the SET key to highlight the first timer setting.
5. Touch the desired timer that needs adjustment.
6. Touch the red ⬆ or ⬇ key on the display to change the timer setting.
7. Touch the DONE key when timer setting changes are complete.
8. Repeat steps 4–7 to adjust a different timer.
9. Touch the key to save the settings and return to the Home Screen.

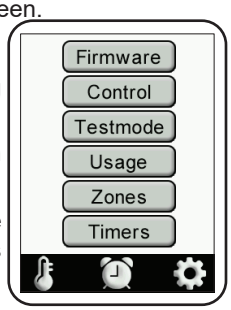

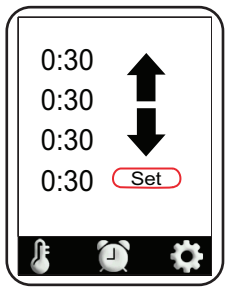

Updating the Firmware

Use the following procedure to perform a firmware update on the touchscreen controller.

1. Move the Power I/O (on/off) switch to the **I** (on) position.
   - The unit will turn on and the touchscreen controller will energize and show the Home Screen.
2. Touch the ⚙ key.
   - Enter the password [2 4 8] using the number keys that appear.
   - The Service screen will appear on the display.
3. Touch the FIRMWARE key on the Service screen to access the Firmware Update screen.

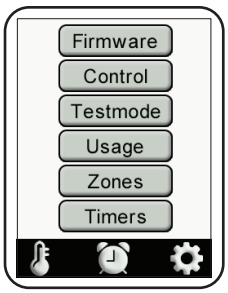

4. Insert the USB drive into the USB port below the controller, and touch the UPDATE key on the Firmware Update screen.
   - The update will begin. When complete, the touchscreen controller will restart and show the Home Screen.

MAINTENANCE

General

Glo-Ray 2-Go™ Heated Shelves are designed for maximum durability and performance with minimum maintenance.

⚠ WARNING

ELECTRIC SHOCK HAZARD:

- **Turn OFF power switch, unplug power cord, and allow unit to cool before performing any cleaning, adjustments, or maintenance.**
- **DO NOT submerge or saturate with water. Unit is not waterproof. Do not operate if unit has been submerged or saturated with water.**
- **Do not clean unit when it is energized or hot.**
- **Do not steam clean or use excessive water on unit.**
- **This unit is not "jet-proof" construction. Do not use jet-clean spray to clean this unit.**

This unit has no "user-serviceable" parts. If service is required on this unit, contact an Authorized Hatco Service Agent or contact the Hatco Service Department at 800-558-0607 or 414-671-6350.

Daily Cleaning

To preserve the finish of the unit as well as maintain performance, it is recommended that the unit be cleaned daily.

1. Turn off the unit, unplug the power cord, and allow the unit to cool.

NOTICE

Use non-abrasive cleaners and cloths only. Abrasive cleaners and cloths could scratch finish of unit, marring its appearance and making it susceptible to soil accumulation.

2. Wipe down all surfaces using a damp cloth. A non-abrasive, cream cleaner may be used for difficult stains. **CAUTION! BURN HAZARD—Do not clean shelf when unit is on.**
3. Wipe dry the entire unit using a clean, dry cloth.

TROUBLESHOOTING GUIDE

⚠ WARNING

This unit must be serviced by qualified personnel only. Service by unqualified personnel may lead to electric shock or burn.

⚠ WARNING

ELECTRIC SHOCK HAZARD: Turn OFF power switch, unplug power cord, and allow unit to cool before performing any cleaning, adjustments, or maintenance.

Symptom	Probable Cause	Corrective Action
Shelf too hot.	Air temperature is set too high.	Adjust the temperature to a lower setting.
	Unit connected to incorrect power supply.	Contact an Authorized Hatco Service Agent or Hatco for assistance.
	Internal thermostat defective.	
Shelf not hot enough.	Unit not allowed enough time to preheat.	Allow unit 15–20 minutes to reach operating temperature.
	Air temperature is set too low.	Adjust the temperature to a higher setting.
	Internal thermostat defective.	Contact an Authorized Hatco Service Agent or Hatco for assistance.
Unit not working at all.	Unit not plugged in.	Plug unit into proper power supply.
	Unit not turned on.	Move Power I/O (on/off) switch to the **I** (on) position.
	Circuit breaker tripped.	Reset circuit breaker.
	Power I/O (on/off) switch defective.	Contact an Authorized Hatco Service Agent or Hatco for assistance.
	Internal thermostat defective.	
	Heating element burned out.	

Troubleshooting Questions?

If you continue to have problems resolving an issue, please contact the nearest Authorized Hatco Service Agency or Hatco for assistance. To locate the nearest Service Agency, log onto the Hatco website at **www.hatcocorp.com,** select the *Support* pull-down menu, and click on “Find A Service Agent”; or contact the **Hatco Parts and Service Team** at:

Telephone: 800-558-0607 or 414-671-6350

e-mail: support@hatcocorp.com

OPTIONS AND ACCESSORIES

Side Panels

Side panels are available to enclose the side of each individual shelf.

Back Panels

Back panels are available to enclose the backside of each individual shelf.

4″ (102 mm) Legs

4″ (102 mm) legs are available as accessories for models GRS2G-3920-2 and GRS2G-3920-3.

1. PRODUCT WARRANTY

Hatco warrants the products that it manufactures (the "Products") to be free from defects in materials and workmanship, under normal use and service, for a period of one (1) year from the date of purchase when installed and maintained in accordance with Hatco's written instructions or 18 months from the date of shipment from Hatco. Buyer must establish the Product's purchase date by registering the Product with Hatco or by other means satisfactory to Hatco in its sole discretion.

Hatco warrants the following Product components to be free from defects in materials and workmanship from the date of purchase (subject to the foregoing conditions) for the period(s) of time and on the conditions listed below:

a) **One (1) Year Parts and Labor PLUS One (1) Additional Year Parts-Only Warranty:**
   Conveyor Toaster Elements (metal sheathed)
   Drawer Warmer Elements (metal sheathed)
   Drawer Warmer Drawer Rollers and Slides
   Strip Heater Elements (metal sheathed)
   Display Warmer Elements (metal sheathed air heating)
   Holding Cabinet Elements (metal sheathed air heating)
   Heated Well Elements — HW and HWB Series (metal sheathed)

b) **Two (2) Year Parts and Labor Warranty:**
   Induction Ranges
   Induction Warmers

c) **One (1) Year Parts and Labor PLUS Four (4) Years Parts-Only Warranty:**
   3CS and FR Tanks

d) **One (1) Year Parts and Labor PLUS Nine (9) Years Parts-Only Warranty on:**
   Electric Booster Heater Tanks
   Gas Booster Heater Tanks

e) **Ninety (90) Day Parts-Only Warranty:**
   Replacement Parts

THE FOREGOING WARRANTIES ARE EXCLUSIVE AND IN LIEU OF ANY OTHER WARRANTY, EXPRESSED OR IMPLIED, INCLUDING BUT NOT LIMITED TO ANY IMPLIED WARRANTY OF MERCHANTABILITY OR FITNESS FOR A PARTICULAR PURPOSE OR PATENT OR OTHER INTELLECTUAL PROPERTY RIGHT INFRINGEMENT. Without limiting the generality of the foregoing, SUCH WARRANTIES DO NOT COVER: Coated incandescent light bulbs, fluorescent lights, heat lamp bulbs, coated halogen light bulbs, halogen heat lamp bulbs, xenon light bulbs, LED light tubes, glass components, and fuses; Product failure in booster tank, fin tube heat exchanger, or other water heating equipment caused by liming, sediment buildup, chemical attack, or freezing; or Product misuse, tampering or misapplication, improper installation, or application of improper voltage.

2. LIMITATION OF REMEDIES AND DAMAGES

Hatco's liability and Buyer's exclusive remedy hereunder will be limited solely, at Hatco's option, to repair or replacement using new or refurbished parts or Product by Hatco or a Hatco-authorized service agency (other than where Buyer is located outside of the United States, Canada, United Kingdom, or Australia, in which case Hatco's liability and Buyer's exclusive remedy hereunder will be limited solely to replacement of part under warranty) with respect to any claim made within the applicable warranty period referred to above. Hatco reserves the right to accept or reject any such claim in whole or in part. In the context of this Limited Warranty, "refurbished" means a part or Product that has been returned to its original specifications by Hatco or a Hatco-authorized service agency. Hatco will not accept the return of any Product without prior written approval from Hatco, and all such approved returns shall be made at Buyer's sole expense. HATCO WILL NOT BE LIABLE, UNDER ANY CIRCUMSTANCES, FOR CONSEQUENTIAL OR INCIDENTAL DAMAGES, INCLUDING BUT NOT LIMITED TO LABOR COSTS OR LOST PROFITS RESULTING FROM THE USE OF OR INABILITY TO USE THE PRODUCTS OR FROM THE PRODUCTS BEING INCORPORATED IN OR BECOMING A COMPONENT OF ANY OTHER PRODUCT OR GOODS.

AUTHORIZED PARTS DISTRIBUTORS • DISTRIBUTEURS DE PIÈCES AUTORISÉS

ALABAMA
Jones McLeod Appl. Svc.
Birmingham 205-251-0159

ARIZONA
Tech 24
Phoenix 602-234-2443

Byassee Equipment Co.
Phoenix 602-252-0402

CALIFORNIA
Industrial Electric
Commercial Parts & Service, Inc.
Huntington Beach 714-379-7100

Chapman Appl. Service
San Diego 619-298-7106

P & D Appliance
Commercial Parts & Service, Inc.
S. San Francisco 650-635-1900

COLORADO
Hawkins Commercial Appliance
Englewood 303-781-5548

FLORIDA
Whaley Foodservice Repair
Jacksonville 904-725-7800

Whaley Foodservice Repair
Orlando 407-757-0851

B.G.S.I./Heritage
Pompano Beach 954-971-0456

Comm. Appliance Service
Tampa 813-663-0313

GEORGIA
Heritage Service Group
Norcross 866-388-9837

HAWAII
Burney's Comm. Service, Inc.
Honolulu 808-848-1466

Food Equip Parts & Service
Honolulu 808-847-4871

ILLINOIS
Parts Town
Addison 708-865-7278

Eichenauer Elec. Service
Decatur 217-429-4229

Midwest Elec. Appl. Service
Elmhurst 630-279-8000

Cone's Repair Service
Moline 309-797-5323

IOWA
Goodwin Tucker Group
Des Moines 515-262-9308

KENTUCKY
Tech 24
Lexington 859-254-8854

Tech 24
Louisville 502-451-5411

LOUISIANA
Chandlers Parts & Service
Baton Rouge 225-272-6620

MARYLAND
Electric Motor Service
Baltimore 410-467-8080

MASSACHUSETTS
Ace Service Co., Inc.
Needham 781-449-4220

MICHIGAN
Bildons Appliance Service
Detroit 248-478-3320

Commercial Kitchen Service
Bay City 989-893-4561

Midwest Food Equip. Service
Grandville 616-261-2000

MISSOURI
General Parts
Kansas City 816-421-5400

Commercial Kitchen Services
St. Louis 314-890-0700

Kaemmerlen Parts & Service
St. Louis 314-535-2222

NEBRASKA
Anderson Electric
Omaha 402-341-1414

NEVADA
Burney's Commercial
Las Vegas 702-736-0006

Hi. Tech Commercial Service
N. Las Vegas 702-649-4616

NEW JERSEY
Jay Hill Repair
Fairfield 973-575-9145

Service Plus
Flanders 973-691-6300

NEW YORK
Alpro Service Co.
Maspeth 718-386-2515

Duffy's - AIS
Buffalo 716-884-7425

3Wire
Plattsburgh 800-634-5005

Duffy's - AIS
Sauquoit 800-836-1014

J.B. Brady, Inc.
Syracuse 315-422-9271

NORTH CAROLINA
Authorized Appliance
Charlotte 704-377-4501

OHIO
Akron/Canton Comm. Svc. Inc.
Akron 330-753-6634

Tech 24
Cincinnati 513-772-6600

Commercial Parts and Service
Columbus 614-221-0057

Electrical Appl. Repair Service
Brooklyn Heights 216-459-8700

E. A. Wichman Co.
Toledo 419-385-9121

OKLAHOMA
Hagar Rest. Service, Inc.
Oklahoma City 405-235-2184

OREGON
General Parts Group
Portland 503-624-0890

PENNSYLVANIA
Elmer Schultz Services
Philadelphia 215-627-5401

FAST Comm. Appl. Service
Philadelphia 215-288-4800

AIS Commercial Parts and Service
Pittsburgh 412-809-0244

K & D Service Co.
Harrisburg 717-236-9039

Electric Repair Co.
Reading 610-376-5444

RHODE ISLAND
Marshall Electric Co.
Providence 401-331-1163

SOUTH CAROLINA
Whaley Foodservice Repair
Lexington 803-996-9900

TENNESSEE
Camp Electric
Memphis 901-527-7543

TEXAS
Armstrong Repair Service
Houston 713-666-7100

Cooking Equipment Specialist
Mesquite 972-686-6666

Commercial Kitchen Repair Co.
San Antonio 210-735-2811

UTAH
La Monica's Rest. Equip. Service
Murray 801-263-3221

VIRGINIA
Daubers
Norfolk 757-855-4097

Daubers
Springfield 703-866-3600

WASHINGTON
3Wire
Seattle 800-207-3146

WISCONSIN
A.S.C., Inc.
Madison 608-246-3160

A.S.C., Inc.
Milwaukee 414-543-6460

CANADA

ALBERTA
Key Food Equipment Service
Edmonton 780-438-1690

BRITISH COLUMBIA
Key Food Equipment Service
Vancouver 604-433-4484

Key Food Equipment Service
Victoria 250-920-4888

MANITOBA
Air Rite, Inc.
Winnipeg 204-895-2300

NEW BRUNSWICK
EMR Services, Ltd.
Moncton 506-855-4228

ONTARIO
R.G. Henderson Ltd.
Toronto 416-422-5580

Choquette - CKS, Inc.
Ottawa 613-739-8458

QUÉBEC
Choquette - CKS, Inc.
Montreal 514-722-2000

Choquette - CKS, Inc.
Québec City 418-681-3944

UNITED KINGDOM

Marren Group
Northants +44(0)1933 665313

HATCO CORPORATION
P.O. Box 340500
Milwaukee, WI 53234-0500 U.S.A.
800-558-0607 414-671-6350
support@hatcocorp.com
www.hatcocorp.com

Register your unit online!
See IMPORTANT OWNER INFORMATION section for details.

Enregistrez votre appareil en ligne !
Lisez la section INFORMATIONS IMPORTANTES POUR LE PROPRIETAIRE *pour plus d'informations.*